IMPORTANT NOTE:
Locate the Specification Label on unit to determine exact Model Name and electrical specifications. This information is needed to identify the correct replacement parts. See exploded view illustration(s) for Specification Label location.

⚠ CAUTION

Use of replacement parts other than those supplied by Hatco Corporation may result in damage to unit or injury to personnel and will void all warranties.

Decorative Carving Station

DCS Series

Model Name	Page	Model Name	Page
DCS400-1	2	DCSB400-2420-1	6
DCS400-1CM	4	DCSB400-3624-2	6
		DCSB400-R24-1	6

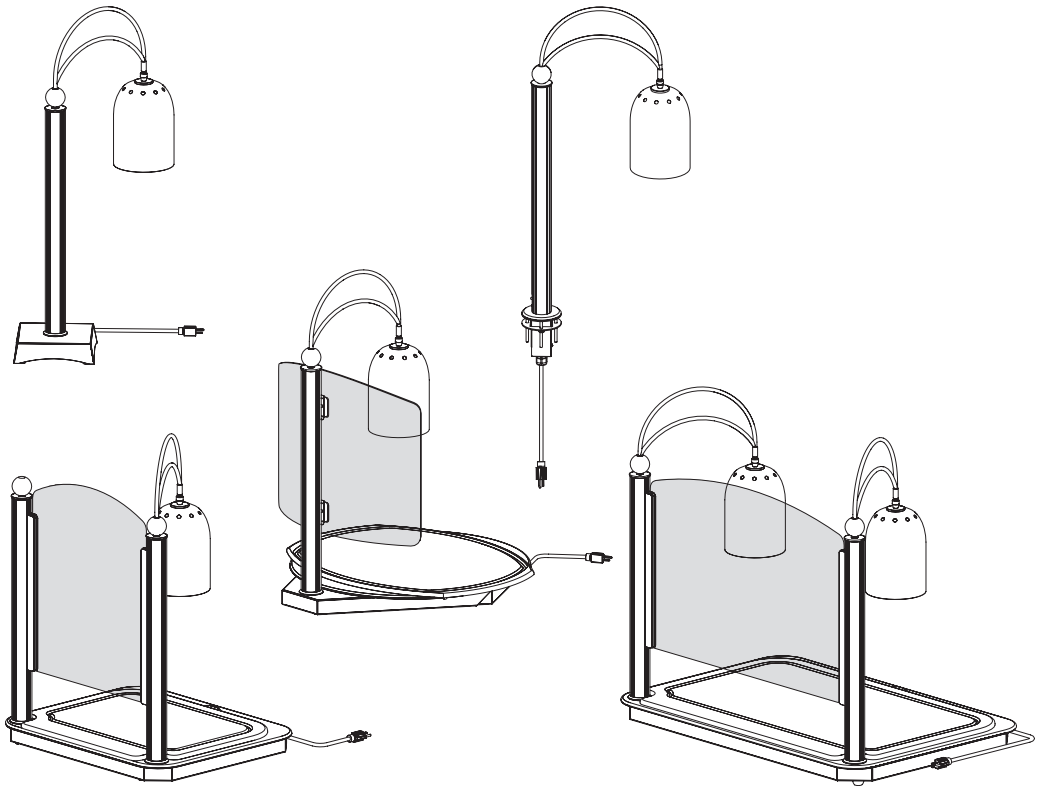

Replacement Parts List

© 2026 Hatco Corporation

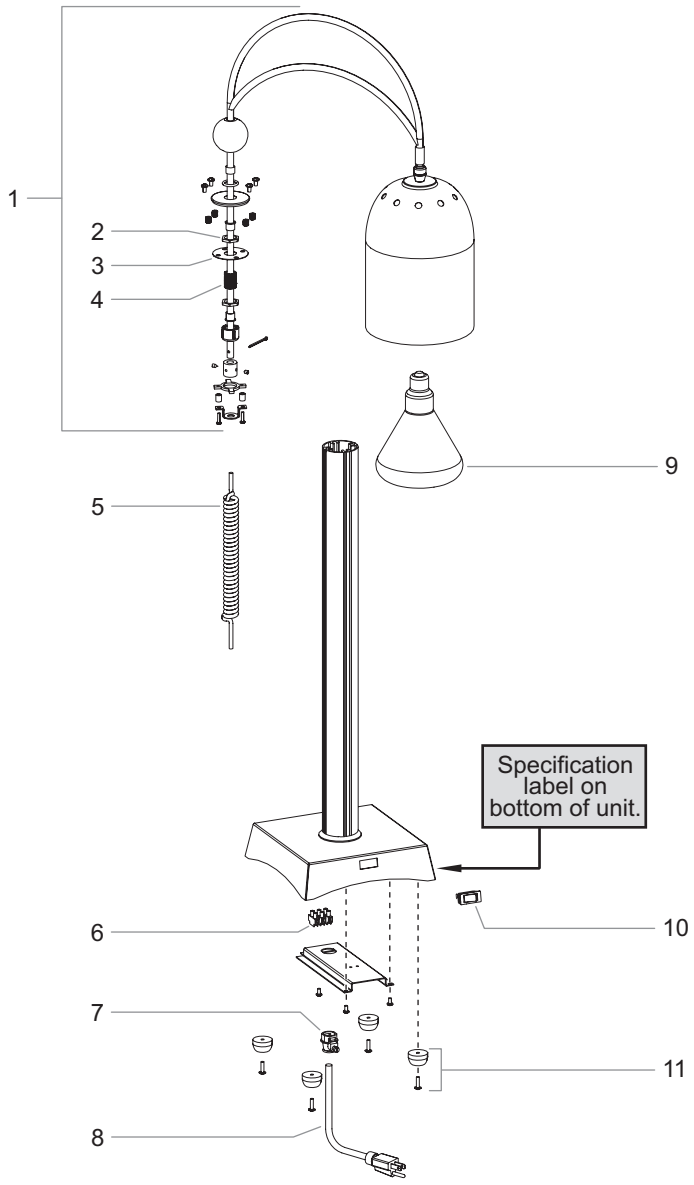

24 Hour 7 Day Parts and Service Assistance available in the United States and Canada by calling 414-671-6350.

⚠ CAUTION

Use of replacement parts other than those supplied by Hatco® Corporation may result in damage to the unit or injury to personnel and will void all warranties.

Parts for Model DCS400-1

Item	Description	Part No.	Qty.
1	Hook Assembly, Center Mount		
	Bright Nickel	R00.04.0085.00	1
	Bright Brass	R00.04.0086.00	1
	Bright Copper	R00.04.0096.00	1
	Antique Bronze	R00.04.0076.00	1
2	Locknut	02.20.270.00	2
3	Cap, Post	04.52.016.00	1
4	Nipple, Straight	02.20.359.00	1
5	Coiled Cord	02.18.253.00	1
6	T-Block	R02.15.030.00	1
7	Cord Grip	02.20.212.00	1
8	Power Cord		
	NEMA 5-15P	R02.18.030.00	1
	CEE Schuko	02.18.077.00	1
	BS 1363	02.18.066.00	1
	AS 3112	02.18.207.00	1

Item	Description	Part No.	Qty.
9	Bulb		
	120 V, 250 W, White, Coated	02.30.069.00	1
	240 V, 250 W, White, Coated	02.30.100.00	1
10	Switch, Rocker	02.19.177.00	1
11	Foot	R05.30.029.00	4
	Wiring Diagram		
	120 V	10-01-801	
	240 V	10-01-849	

The shaded areas in the list contain information for **International models only.**

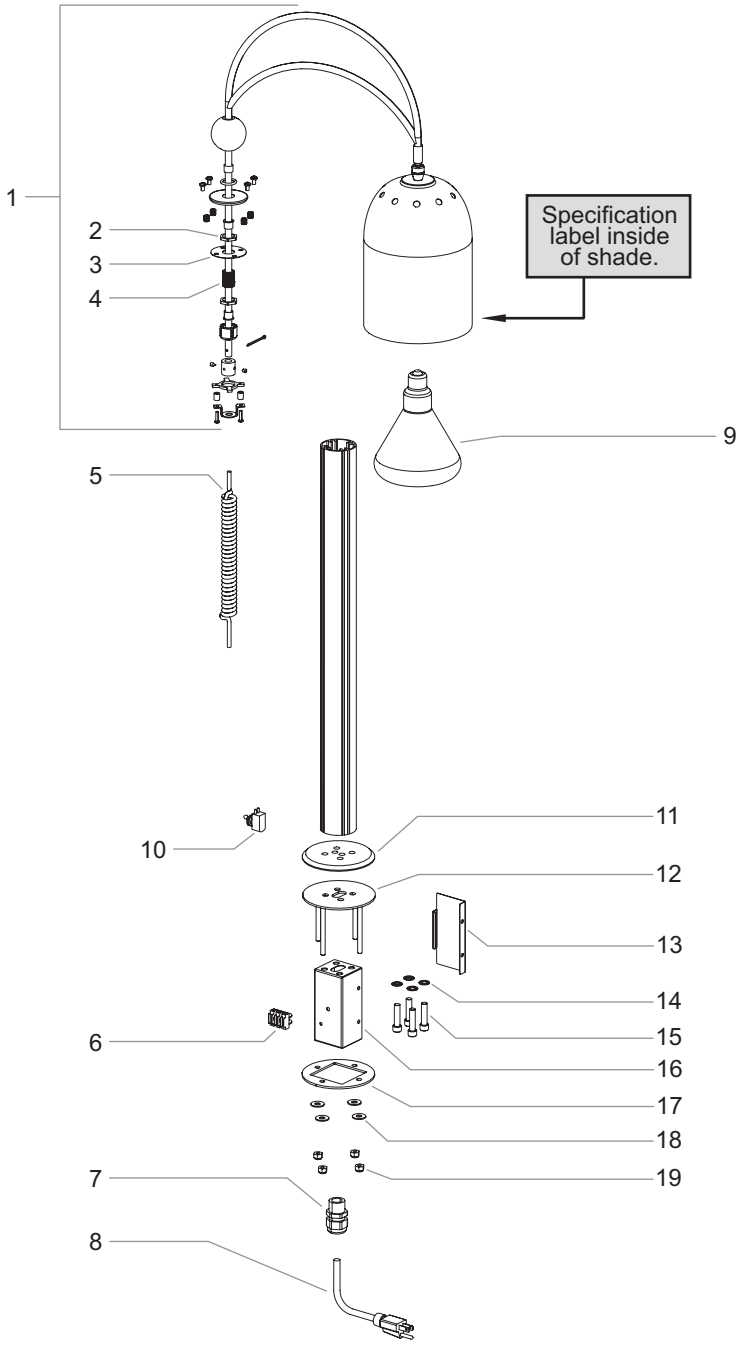

NOTE: The last four digits in a ten digit numerical serial number are the manufacturing date code.
Example: Serial number 9625062431 has a date code of "2431" which indicates the following: 2431

Week Thirty-One
Year 2024

Parts for Model DCS400-1CM

Item	Description	Part No.	Qty.
1	Hook Assembly, Center Mount		
	Bright Nickel	R00.04.0085.00	1
	Bright Brass	R00.04.0086.00	1
	Bright Copper	R00.04.0096.00	1
	Antique Bronze	R00.04.0076.00	1
2	Locknut	02.20.270.00	2
3	Cap, Post	04.52.016.00	1
4	Nipple, Straight	02.20.359.00	1
5	Coiled Cord	02.18.253.00	1
6	T-Block	R02.15.030.00	1
7	Cord Grip	02.20.259.00	1
8	Power Cord		
	NEMA 5-15P	R02.18.030.00	1
	CEE Schuko	02.18.077.00	1
	BS 1363	02.18.066.00	1
	AS 3112	02.18.207.00	1

The shaded areas in the list contain information for **International models only.**

Item	Description	Part No.	Qty.
9	Bulb		
	120 V, 250 W, White, Coated	02.30.069.00	1
	240 V, 250 W, White, Coated	02.30.100.00	1
10	Switch, Toggle *	02.19.168.00	1
11	Post Base		
	Night Sky	04.52.219.00	1
	Sawgrass	04.52.220.00	1
	Gray Granite	04.52.221.00	1
	Bermuda Sand	04.52.222.00	1
	Ice	04.52.391.00	1
	Ash Gray	04.52.392.00	1
	Birch	04.52.393.00	1
12	Plate	04.52.217.00	1
13	Cover, Wire Box	04.52.133.00	1
14	Washers	05.11.056.00	4
15	Screws	05.04.819.00	4
16	Wire Box	04.52.131.00	1
17	Clamp Plate	04.52.218.00	1
18	Washers, Clamp Plate	05.11.013.00	4
19	Nuts, Clamp Plate	05.04.546.00	4
	Wiring Diagram		
	120 V	10-01-1107	
	230 V	10-01-1108	

* P/N 07.01.300.00 (Toggle Switch Plate) is also available for export units.

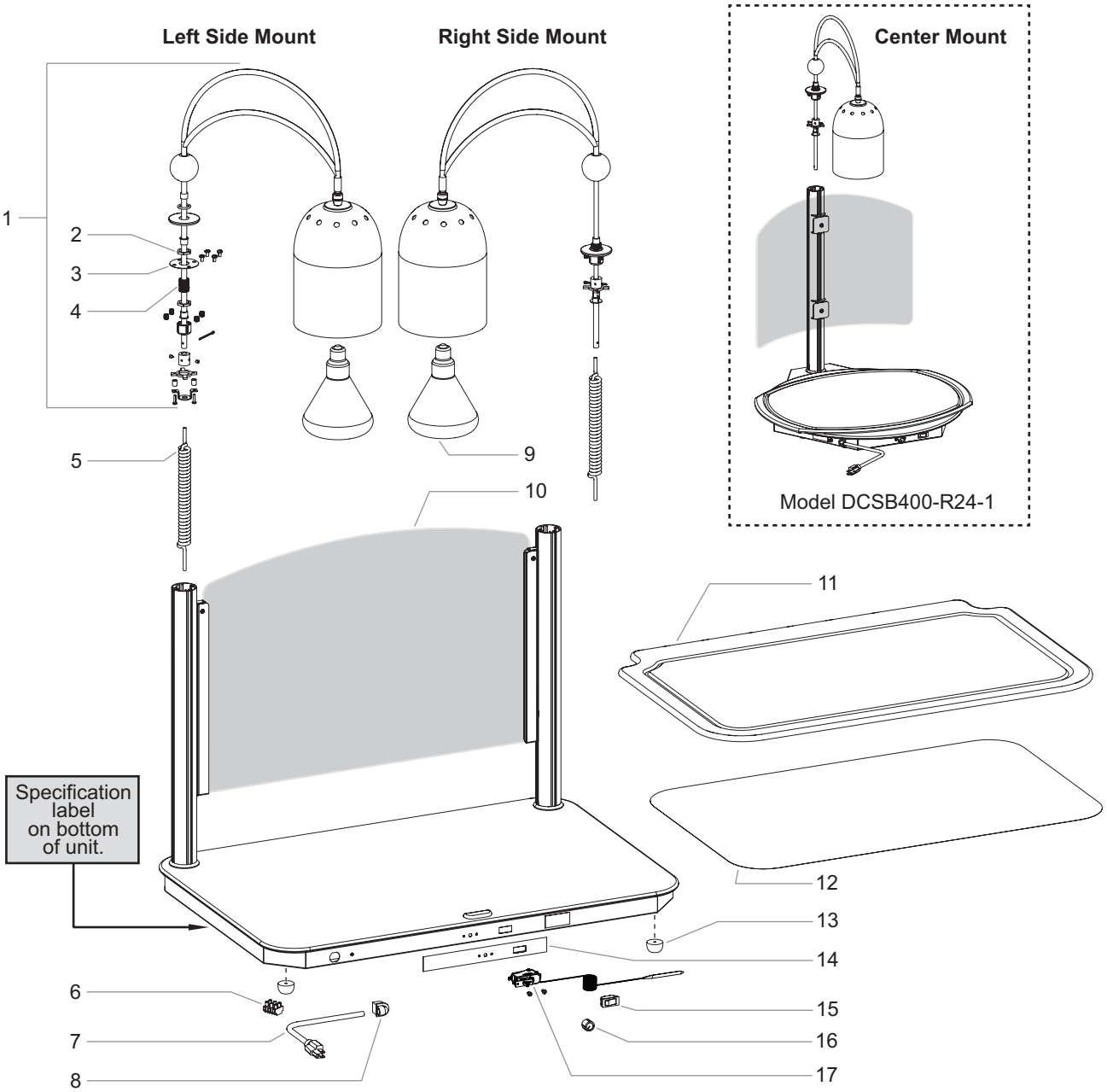

24 Hour 7 Day Parts and Service Assistance available in the United States and Canada by calling 414-671-6350.

⚠ CAUTION

Use of replacement parts other than those supplied by Hatco Corporation may result in damage to the unit or injury to personnel and will void all warranties.

Parts for Models DCSB400-2420-1, DCSB400-3624-2, and DCSB400-R24-1

Item	Description	Part No.	Qty.
1	Hook Assembly, Center Mount (DCSB400-R24-1 Models only)		
	Bright Nickel	R00.04.0085.00	1
	Bright Brass	R00.04.0086.00	1
	Bright Copper	R00.04.0096.00	1
	Antique Bronze	R00.04.0076.00	1
	Hook Assembly, Right Side Mount (DCSB400-3624-2 Models only)		
	Bright Nickel	R00.04.0075.00	1
	Bright Brass	R00.04.0077.00	1
	Bright Copper	R00.04.0095.00	1
	Antique Bronze	R00.04.0084.00	1
	Hook Assembly, Left Side Mount (DCSB400-2420-1 and -3624-2 Models only)		
	Bright Nickel	R00.04.0072.00	1
	Bright Brass	R00.04.0073.00	1
	Bright Copper	R00.04.0094.00	1
	Antique Bronze	R00.04.0078.00	1
2	Locknut	02.20.270.00	2–4
3	Cap, Post	04.52.016.00	1–2
4	Nipple, Straight	02.20.359.00	1–2
5	Coiled Cord	02.18.253.00	1–2
6	T-Block	R02.15.030.00	1
7	Power Cord		
	NEMA 5-15P	R02.18.030.00	1
	CEE Schuko	02.18.077.00	1
	BS 1363	02.18.066.00	1
	AS 3112	02.18.207.00	1
8	Cord Grip		
	Right Angle	02.20.330.00	1
	Straight	02.20.212.00	1
9	Bulb		
	120 V, 250 W, White, Coated	02.30.069.00	1–2
	240 V, 250 W, White, Coated	02.30.100.00	1–2
10	Glass		
	DCSB400-R24-1	04.40.330.00	1
	DCSB400-2420-1	04.40.329.00	1
	DCSB400-3624-2	04.40.344.00	1

NOTE: Quantities shown as a range (example = "1–2") are dependent upon the specific model.

The shaded areas contain electrical information for **International models only**.

Item	Description	Part No.	Qty.
11	Cutting Board, Swanstone		
	DCSB400-R24-1 Model		
	Night Sky	04.52.187.00	1
	Sawgrass	04.52.190.00	1
	Gray Granite	04.52.188.00	1
	Bermuda Sand	04.52.189.00	1
	Ice	04.52.385.00	1
	Ash Gray	04.52.386.00	1
	Birch	04.52.387.00	1
	DCSB400-2420-1 Model		
	Night Sky	04.52.191.00	1
	Sawgrass	04.52.192.00	1
	Gray Granite	04.52.193.00	1
	Bermuda Sand	04.52.194.00	1
	Ice	04.52.382.00	1
	Ash Gray	04.52.383.00	1
	Birch	04.52.384.00	1
	DCSB400-3624-2 Model		
	Night Sky	04.52.195.00	1
	Sawgrass	04.52.196.00	1
	Gray Granite	04.52.197.00	1
	Bermuda Sand	04.52.198.00	1
	Ice	04.52.379.00	1
	Ash Gray	04.52.380.00	1
	Birch	04.52.381.00	1
12	Blanket Heater		
	120 V, DCSB400-R24-1	02.05.708.00	1
	230 V, DCSB400-R24-1	02.05.714.00	1
	120 V, DCSB400-2420-1	02.05.710.00	1
	230 V, DCSB400-2420-1	02.05.715.00	1
	120 V, DCSB400-3624-2	02.05.711.00	1
	230 V, DCSB400-3624-2	02.05.716.00	1
13	Foot	R05.30.029.00	4–6
14	Control Label	07.01.330.00	1
15	Rocker Switch	02.19.177.00	1
16	Knob, Thermostat	05.30.039.00	1
17	Thermostat	R02.16.066X.00	1
	Wiring Diagram		
	DCSB400-R24-1 and -2420-1		
	120 V	10-01-724	
	230 V	10-01-847	
	DCSB400-3624-2		
	120 V	10-01-800	
	230 V	10-01-848	

AUTHORIZED PARTS DISTRIBUTORS • DISTRIBUTEURS DE PIÈCES AUTORISÉS

ALABAMA

Jones McLeod Appl. Svc.
Birmingham 205-251-0159

ARIZONA

Tech 24
Phoenix 602-234-2443

Byassee Equipment Co.
Phoenix 602-252-0402

CALIFORNIA

Industrial Electric
Commercial Parts & Service, Inc.
Huntington Beach 714-379-7100

Chapman Appl. Service
San Diego 619-298-7106

P & D Appliance
Commercial Parts & Service, Inc.
S. San Francisco 650-635-1900

COLORADO

Hawkins Commercial Appliance
Englewood 303-781-5548

FLORIDA

Whaley Foodservice Repair
Jacksonville 904-725-7800

Whaley Foodservice Repair
Orlando 407-757-0851

B.G.S.I./Heritage
Pompano Beach 954-971-0456

Comm. Appliance Service
Tampa 813-663-0313

GEORGIA

Heritage Service Group
Norcross 866-388-9837

HAWAII

Burney's Comm. Service, Inc.
Honolulu 808-848-1466

Food Equip Parts & Service
Honolulu 808-847-4871

ILLINOIS

Parts Town
Addison 708-865-7278

Eichenauer Elec. Service
Decatur 217-429-4229

Midwest Elec. Appl. Service
Elmhurst 630-279-8000

Cone's Repair Service
Moline 309-797-5323

IOWA

Goodwin Tucker Group
Des Moines 515-262-9308

KENTUCKY

Tech 24
Lexington 859-254-8854

Tech 24
Louisville 502-451-5411

LOUISIANA

Chandlers Parts & Service
Baton Rouge 225-272-6620

MARYLAND

Electric Motor Service
Baltimore 410-467-8080

MASSACHUSETTS

Ace Service Co., Inc.
Needham 781-449-4220

MICHIGAN

Bildons Appliance Service
Detroit 248-478-3320

Commercial Kitchen Service
Bay City 989-893-4561

Midwest Food Equip. Service
Grandville 616-261-2000

MISSOURI

General Parts
Kansas City 816-421-5400

Commercial Kitchen Services
St. Louis 314-890-0700

Kaemmerlen Parts & Service
St. Louis 314-535-2222

NEBRASKA

Anderson Electric
Omaha 402-341-1414

NEVADA

Burney's Commercial
Las Vegas 702-736-0006

Hi. Tech Commercial Service
N. Las Vegas 702-649-4616

NEW JERSEY

Jay Hill Repair
Fairfield 973-575-9145

Service Plus
Flanders 973-691-6300

NEW YORK

Alpro Service Co.
Maspeth 718-386-2515

Duffy's - AIS
Buffalo 716-884-7425

3Wire
Plattsburgh 800-634-5005

Duffy's - AIS
Sauquoit 800-836-1014

J.B. Brady, Inc.
Syracuse 315-422-9271

NORTH CAROLINA

Authorized Appliance
Charlotte 704-377-4501

OHIO

Akron/Canton Comm. Svc. Inc.
Akron 330-753-6634

Tech 24
Cincinnati 513-772-6600

Commercial Parts and Service
Columbus 614-221-0057

Electrical Appl. Repair Service
Brooklyn Heights 216-459-8700

E. A. Wichman Co.
Toledo 419-385-9121

OKLAHOMA

Hagar Rest. Service, Inc.
Oklahoma City 405-235-2184

OREGON

General Parts Group
Portland 503-624-0890

PENNSYLVANIA

Elmer Schultz Services
Philadelphia 215-627-5401

FAST Comm. Appl. Service
Philadelphia 215-288-4800

AIS Commercial Parts and Service
Pittsburgh 412-809-0244

K & D Service Co.
Harrisburg 717-236-9039

Electric Repair Co.
Reading 610-376-5444

RHODE ISLAND

Marshall Electric Co.
Providence 401-331-1163

SOUTH CAROLINA

Whaley Foodservice Repair
Lexington 803-996-9900

TENNESSEE

Camp Electric
Memphis 901-527-7543

TEXAS

Armstrong Repair Service
Houston 713-666-7100

Cooking Equipment Specialist
Mesquite 972-686-6666

Commercial Kitchen Repair Co.
San Antonio 210-735-2811

UTAH

La Monica's Rest. Equip. Service
Murray 801-263-3221

VIRGINIA

Daubers
Norfolk 757-855-4097

Daubers
Springfield 703-866-3600

WASHINGTON

3Wire
Seattle 800-207-3146

WISCONSIN

A.S.C., Inc.
Madison 608-246-3160

A.S.C., Inc.
Milwaukee 414-543-6460

CANADA

ALBERTA

Key Food Equipment Service
Edmonton 780-438-1690

BRITISH COLUMBIA

Key Food Equipment Service
Vancouver 604-433-4484

Key Food Equipment Service
Victoria 250-920-4888

MANITOBA

Air Rite, Inc.
Winnipeg 204-895-2300

NEW BRUNSWICK

EMR Services, Ltd.
Moncton 506-855-4228

ONTARIO

R.G. Henderson Ltd.
Toronto 416-422-5580

Choquette - CKS, Inc.
Ottawa 613-739-8458

QUÉBEC

Choquette - CKS, Inc.
Montreal 514-722-2000

Choquette - CKS, Inc.
Québec City 418-681-3944

UNITED KINGDOM

Marren Group
Northants +44(0)1933 665313

HATCO CORPORATION
P.O. Box 340500
Milwaukee, WI 53234-0500 U.S.A.
414-671-6350
partsandservice@hatcocorp.com
www.hatcocorp.com

24 Hour 7 Day Parts and Service Assistance available in the United States and Canada by calling 414-671-6350.